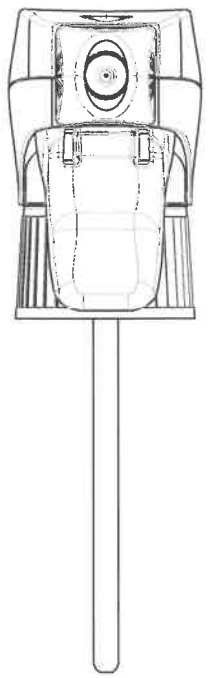

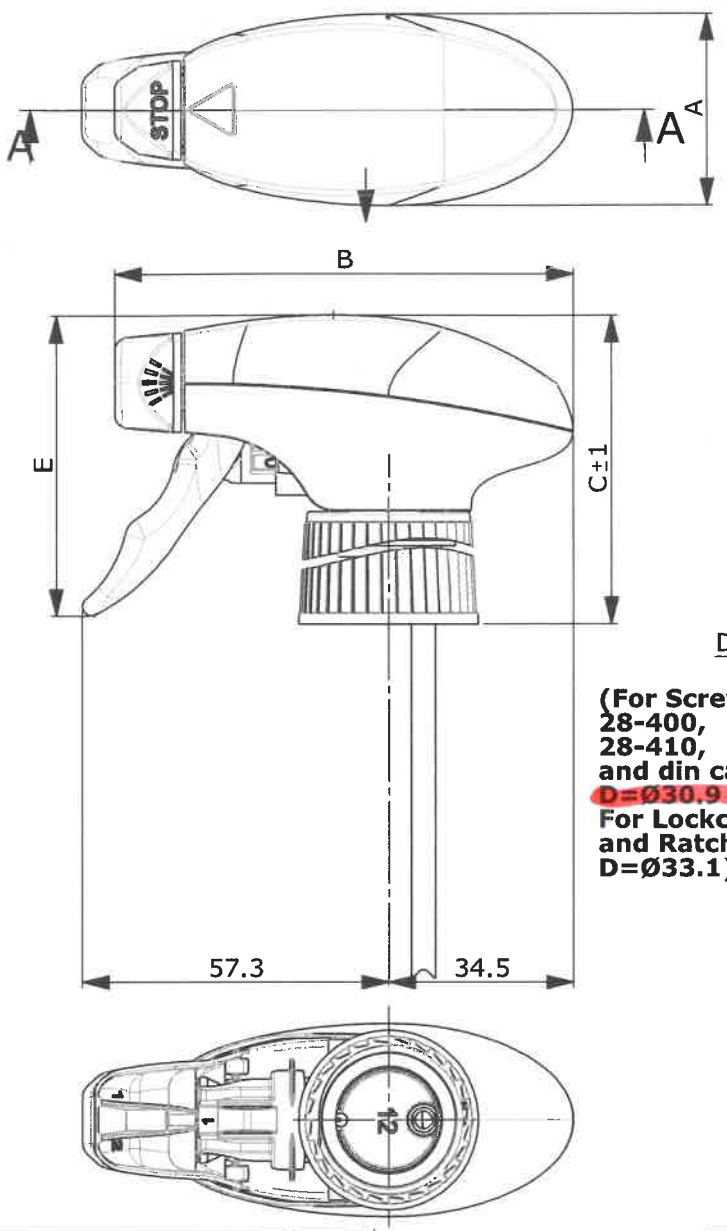

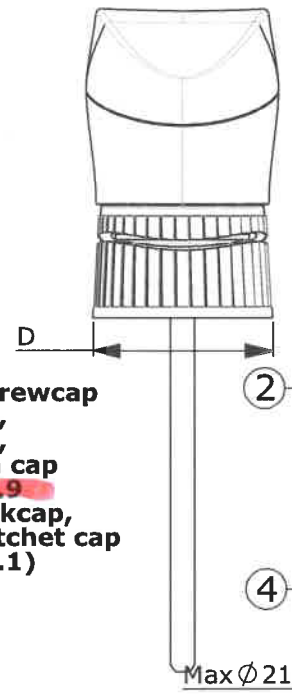

(For Screwcap 28-400, 28-410, and din cap D=Ø30.9 For Lockcap, and Ratchet cap D=Ø33.1)

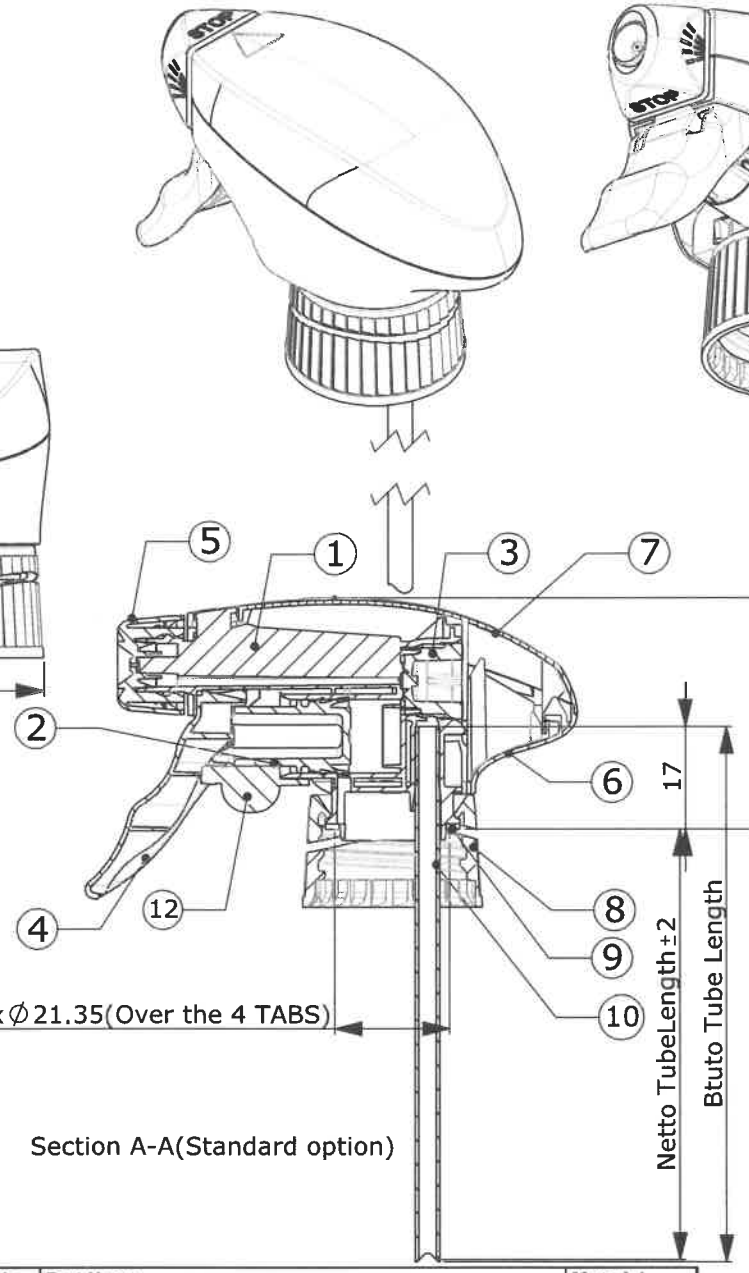

Section A-A(Standard option)

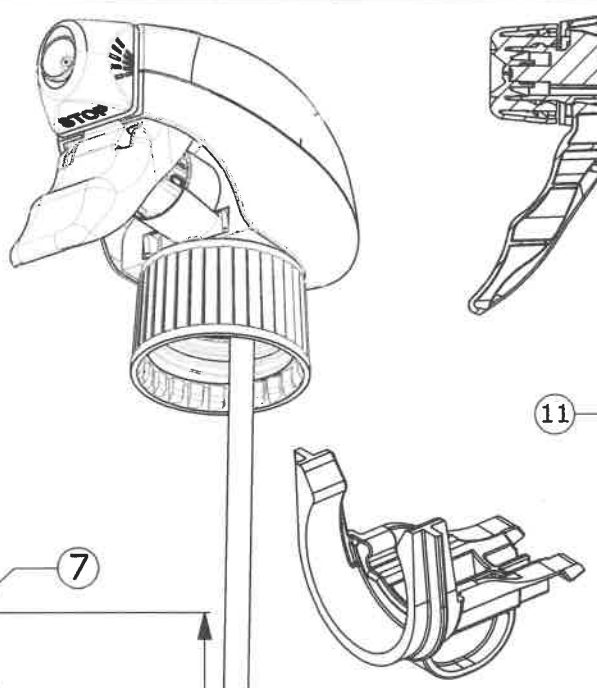

E-commerce lock
Option

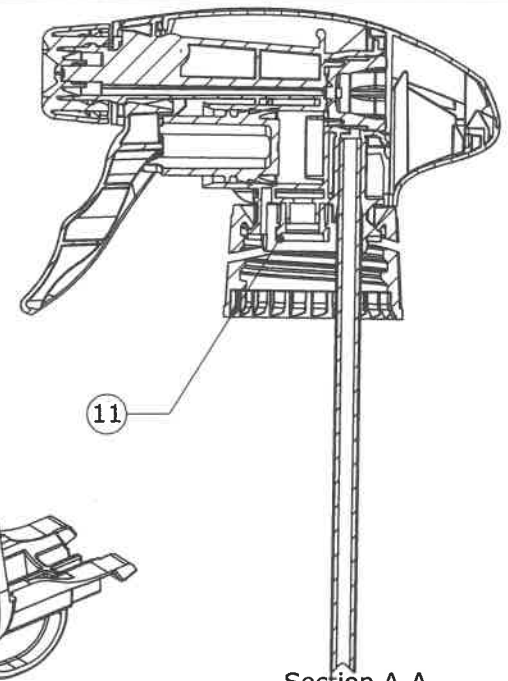

Section A-A
(passive venting option, and the body is 995-030906* body opus screwcap venting **)

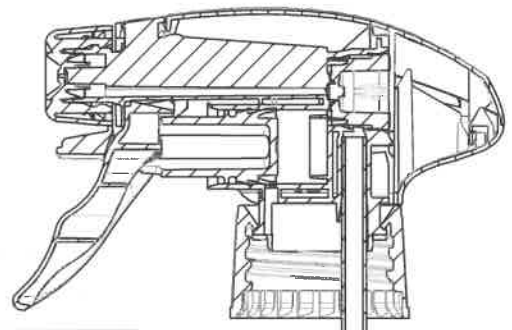

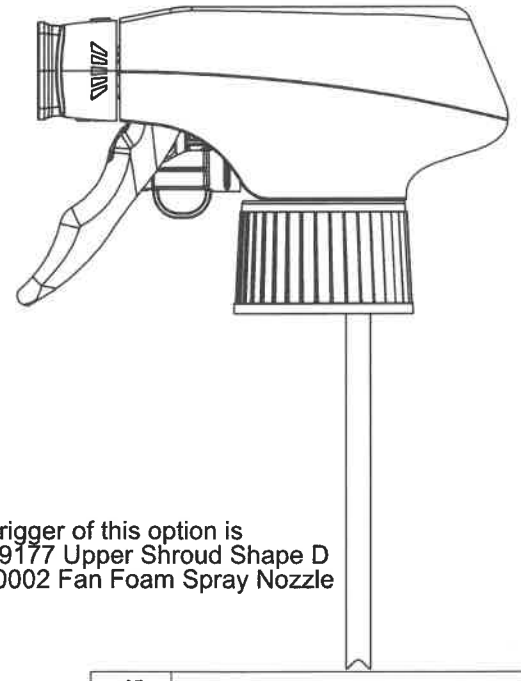

Section A-A (CR)
Nozzle is a CR nozzle
Screw cap is the lock cap

Trigger of this option is
991-0309177 Upper Shroud Shape D
991-1300002 Fan Foam Spray Nozzle

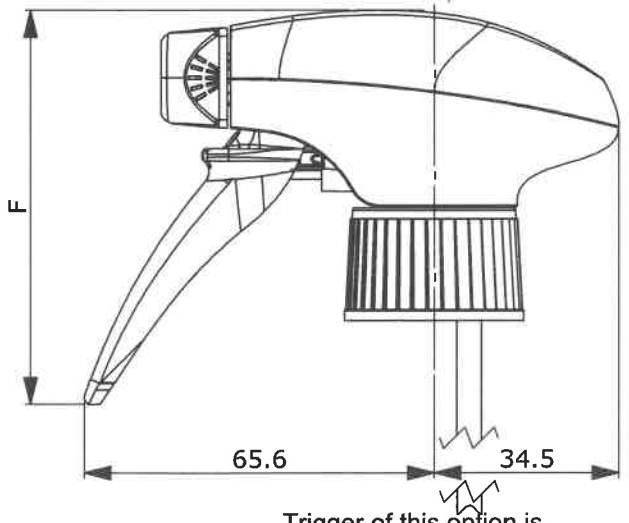

Trigger of this option is
991-0309148 Trigger OpUs Long

Dimensions drawing 991-03095*0 (mm)				
Opus Screw cap				
	Type	Size E	Size F	Size G
1	Shroud A	56.40	73.50	43.28
2	Shroud D	55.80	72.90	42.68

	Size C	Shape A	Shape D
1	28-410 cap	56.80	56.20
2	28-400 cap	52.80	52.20
3	Lock cap	57.80	57.20

Dimensions drawing 991-03095*0 (mm)			
Opus Screw cap			
	Type	Size A	Size B
1	OpUs SO/SOS	36.00	85.70
2	OpUs FO vi	36.00	89.70
3	OpUs Fo nv	36.00	90.10
4	Opus FO vm	36.00	88.65
5	OpUs FAN Spray	36.00	86.45
6	OpUs 4" FAN Spray	36.00	86.45
7	OpUs SOF	36.00	88.35
8	OpUs Fan Foam	36.00	87.91

Pos.		Drawing No.	Part Name	Material
1	A	995-0309021/	Body OpUs Srewcap Narrow Angle	P.P
	B	995-0309022/	Body OpUs Srewcap Wide Angle	P.P.
	C	995-0309023/	Body OpUs Srewcap Spray NA-off-Stream	P.P.
	D	995-030906*/	Body OpUs Srewcap Venting	P.P.
	E	995-0309024/	Body OpUs Srew Cap Fan Sprayer	P.P.
2	A	210-1003000/	Piston LF OpAd	P.E.
	B	995-0309120/	Piston OpUs High Output	P.E.
3		995-0309130/	Dome Valve OpUs	P.E.
4	A	995-0309144/	Trigger OpUs shape C	P.P.
	B	991-0309148/	Trigger OpUs Long	P.P.
5	A	210-1005000/	Nozzle OpAd Spray - Off	P.P.
	B	210-1010000/	Nozzle OpAd FO Venting and Nozzle OpAd FO Venting CR	P.P.
	C	995-0309150/	Nozzle Opus Foam-off non Venting	P.P.
	D	991-0801001/	Nozzle OpAd Foam-off with Screen	P.P.
	E	210-1009000/	Nozzle OpAd Spray-Off-stream	P.P.
	F	991-1110001/	4" Fan Spray Nozzle	P.P
	G	991-0910001/	Fan Spray Nozzle(10")	P.P
	H	210-1012000/	OpAd Spray-Off-Foam	P.P
	I	991-1300002/	Fan Foam Spray Nozzle	P.P.
6		995-0309164/	Lower Shroud OpUs Screwcap	P.P.
7	A	995-0309172/	Upper Shroud OpUs Shape A	P.P.
	B	991-0309177/	Upper Shroud OpUs Shape D	P.P.
8	A	995-0309181/	Screwcap 28-410 OpUs	P.P.
	B	991-0309182/	Screwcap 28-400 OpUs	P.P.
	C	991-0309183/	Screwcap Din OpUs	P.P.
	D	991-0309184/	Lockcap OpUs	P.P.
	E	991-0309185/	Ratchet Cap OpUs	P.P.
9		991-0309210/	Gasket OpUs	Tri-Seal
10		991-0309202/	Diptube OpUs High Vicosity	P.P
		991-0309203/	Diptube Opus Soft Tube	LDPE
11		D10SF0/	Gore Packaging Vents	P.P
12		991-0309188/	E-commerce Lock	P.P

REV.NR.	MODIFICATION DISCRIPTION	DATE	PAR.
07	Add Upper Shroud D and Fan Foam Nozzle	15 Mar.2019	S.Gu
06	Added E-commerce Lock ,Soft Tubeupdated the list	24 Mar.2016	A.T
01	Add passive venting option	22 Oct. 2009	N.L.
00	Update drawing	10 Jan. 2008	P.H.

NOT SPECIFIED TOLERANCE : ± 0.5 DIMENS. ± 1° ANGLE

All rights are reserved reproduction in whole or in part is prohibited without the written consent of the copyright owner

MAT. :.	QUANT	SCALE	ROUGH.
FINISH. :.	.	1:1	.
COLOR :.	DRAW. : P.Hurkmans		A2
REMARKS: .	DATE : 04 Feb. 2005		
	DRAWING-NUMBER 991-0309530/07		VIEW 1

AM.PROJ.

POWER BRANDS DISTRIBUTION