版本/REV	说明/DESCRIPTION	修改者/NAME

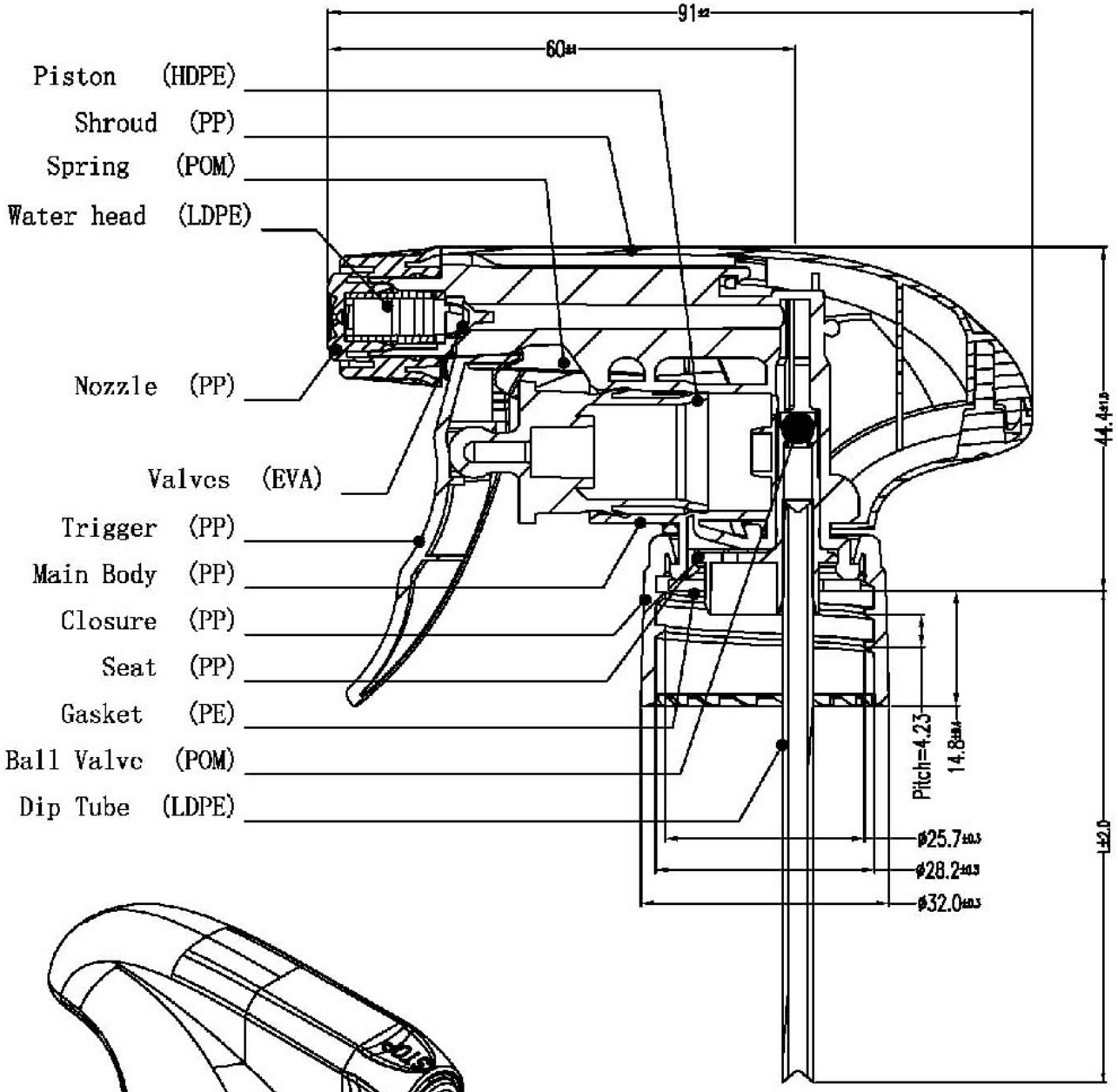

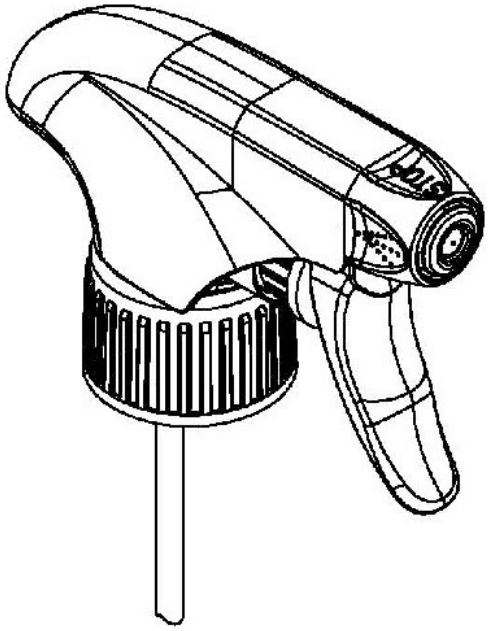

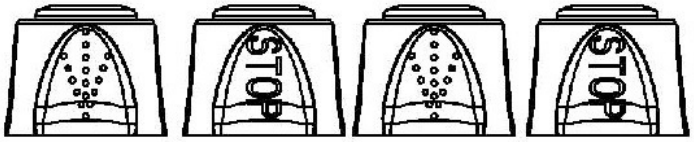

TOLERANCE			■	设计/DRAW:HH 2017.11.09
0-6	±0.05	±0.10	±0.25	
6-24	±0.10	±0.15	±0.40	审核/Examine:
24-65	±0.15	±0.30	±0.85	
65-160	±0.25	±0.50	±1.20	批准/APPROVE:
160-250	±0.35	±0.75	±1.75	
ABOVE 250	±0.50	±1.10	±2.50	材料/Material:
ANGLER	±0.25°	±0.50°	±2.00°	料号/PART NO.

POWER BRANDS DISTRIBUTION

T2964-28/410

重量/Weight:	数量/Qt'y:	UNIT:MM
		SCALE:
		SHEET:1/1
图号/DRAWING NO.T2964-281		REV:A0